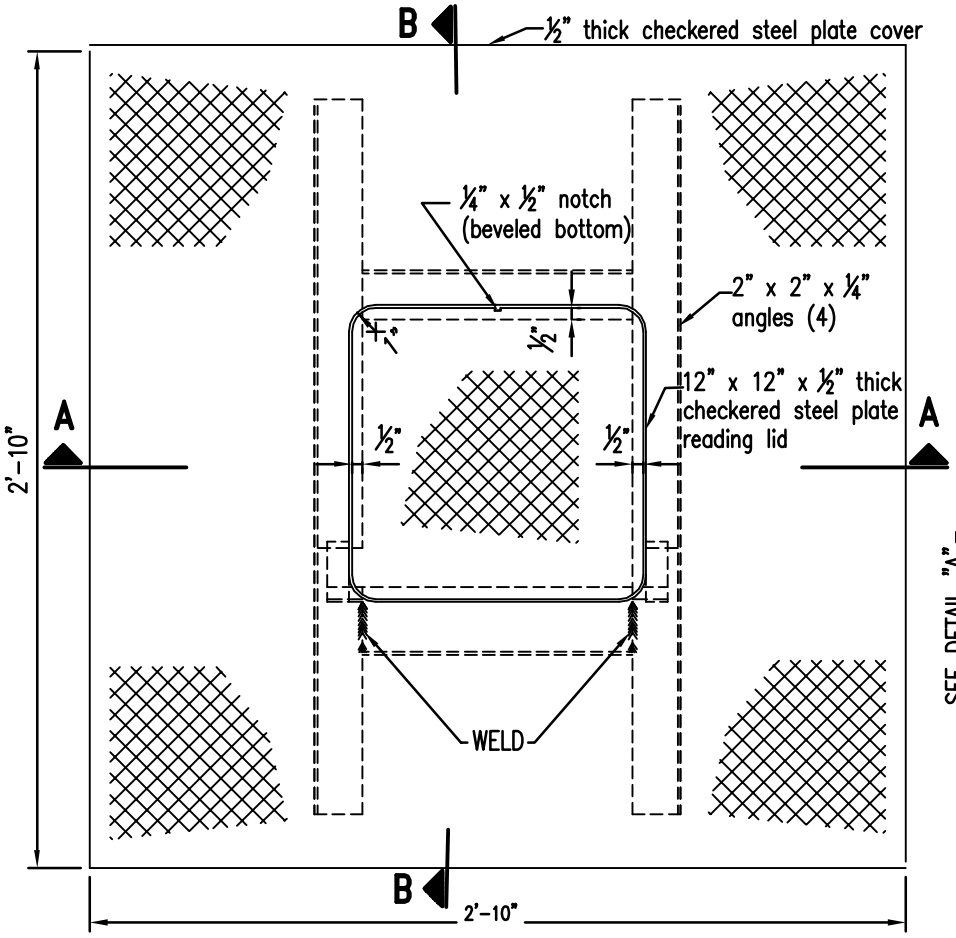

PLAN

SCALE: 1-1/2"=1'

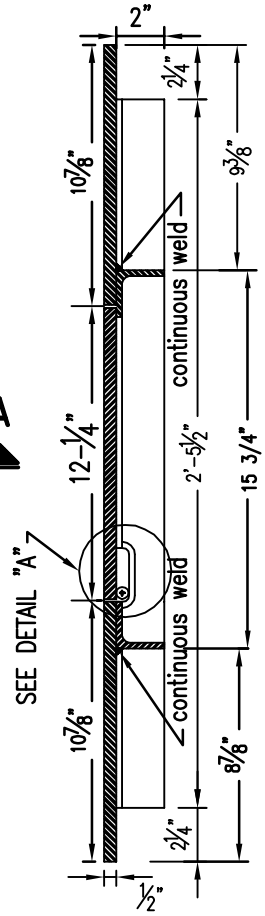

SECTION"B-B"

SCALE: 1-1/2"=1'

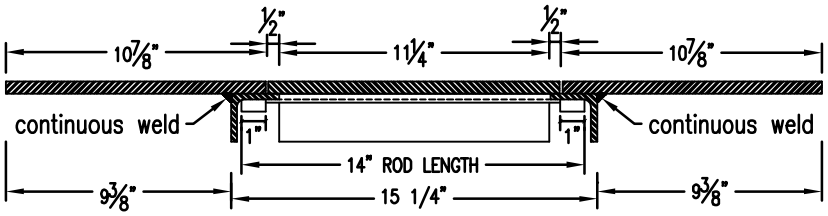

SECTION"A-A"

SCALE: 1-1/2"=1'

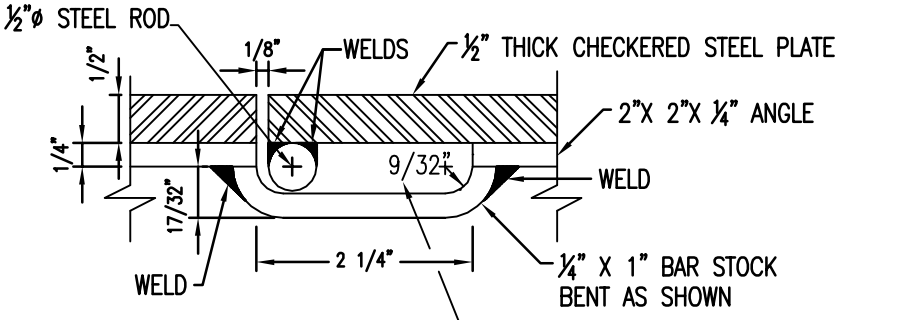

DETAIL "A"

SCALE: 1"=1'

NOTES:

1. SUPPLIER SHALL MARK HIS NAME AND THE YEAR OF MANUFACTURE PERMANENTLY ON THE BOTTOM SIDE OF EACH COVER.
2. ALL WELDS SHALL BE CONTINUOUS.
3. FOLLOWING FABRICATION, THE ENTIRE UNIT SHALL BE THOROUGHLY CLEANED AND HOT-DIP GALVANIZED.

MIAMI-DADE COUNTY Delivering Excellence Every Day	ISSUED DATE:	APPROVED BY:	STANDARD DETAIL	WS 3.15
	11/01/2006	V. E. F.	STANDARD 34"X34"STEEL COVER PLATE FOR NON-TRAFFIC AREAS ONLY	SHEET 2 OF 2