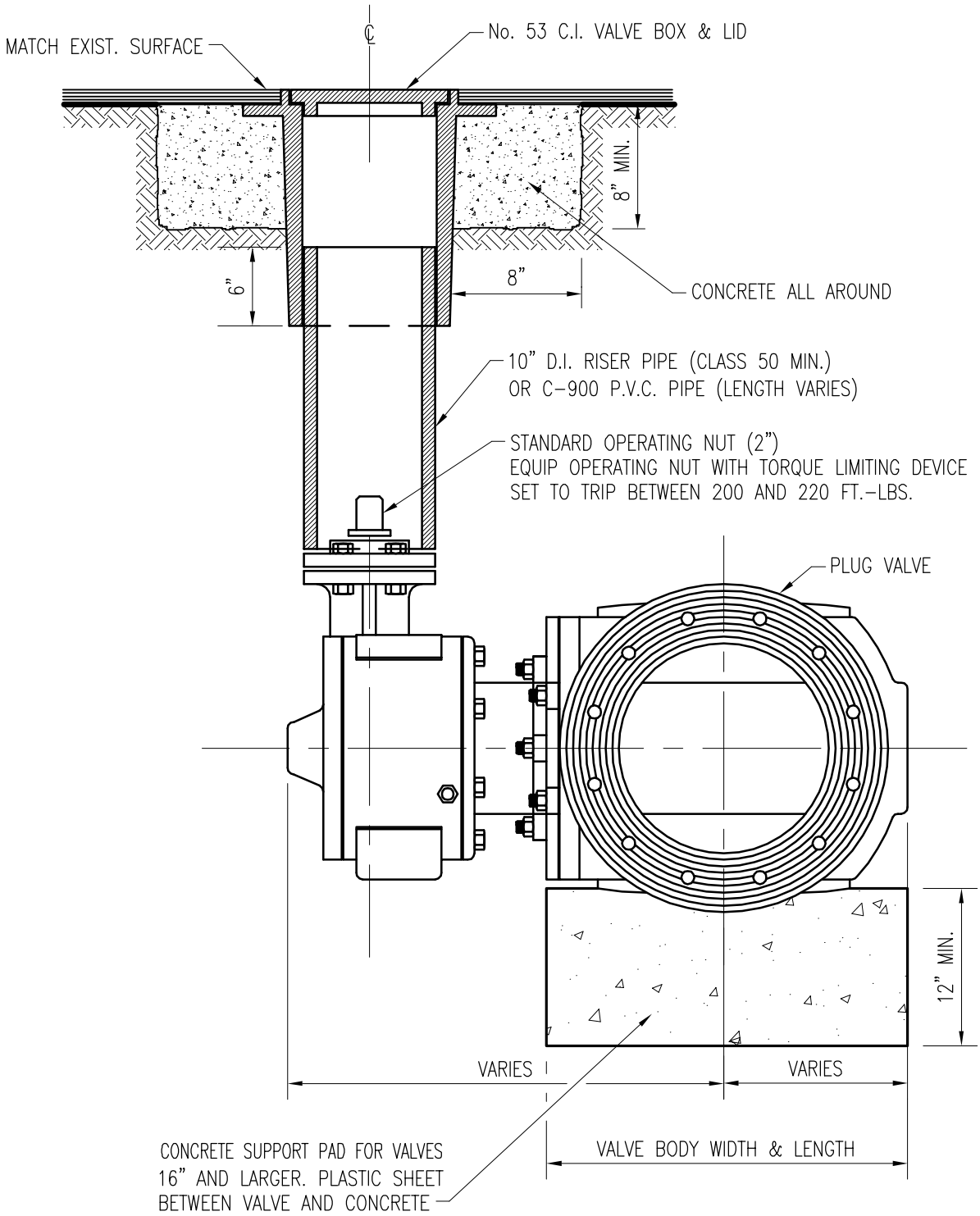


| ITEM | CROSS REF. | SPEC. REF. |
|---|---|---|
| No. 53 VALVE BOX & LID | SS 13.0 | |

MIAMI-DADE COUNTY
Delivering Excellence Every Day
WATER & SEWER DEPARTMENT

| ISSUE DATE | APPROVED BY |
|---|---|
| 03/24/2009 | V.F.C. |

STANDARD DETAIL

TYPICAL PLUG VALVE INSTALLATION

SS 19.1

SHEET 1 OF 1