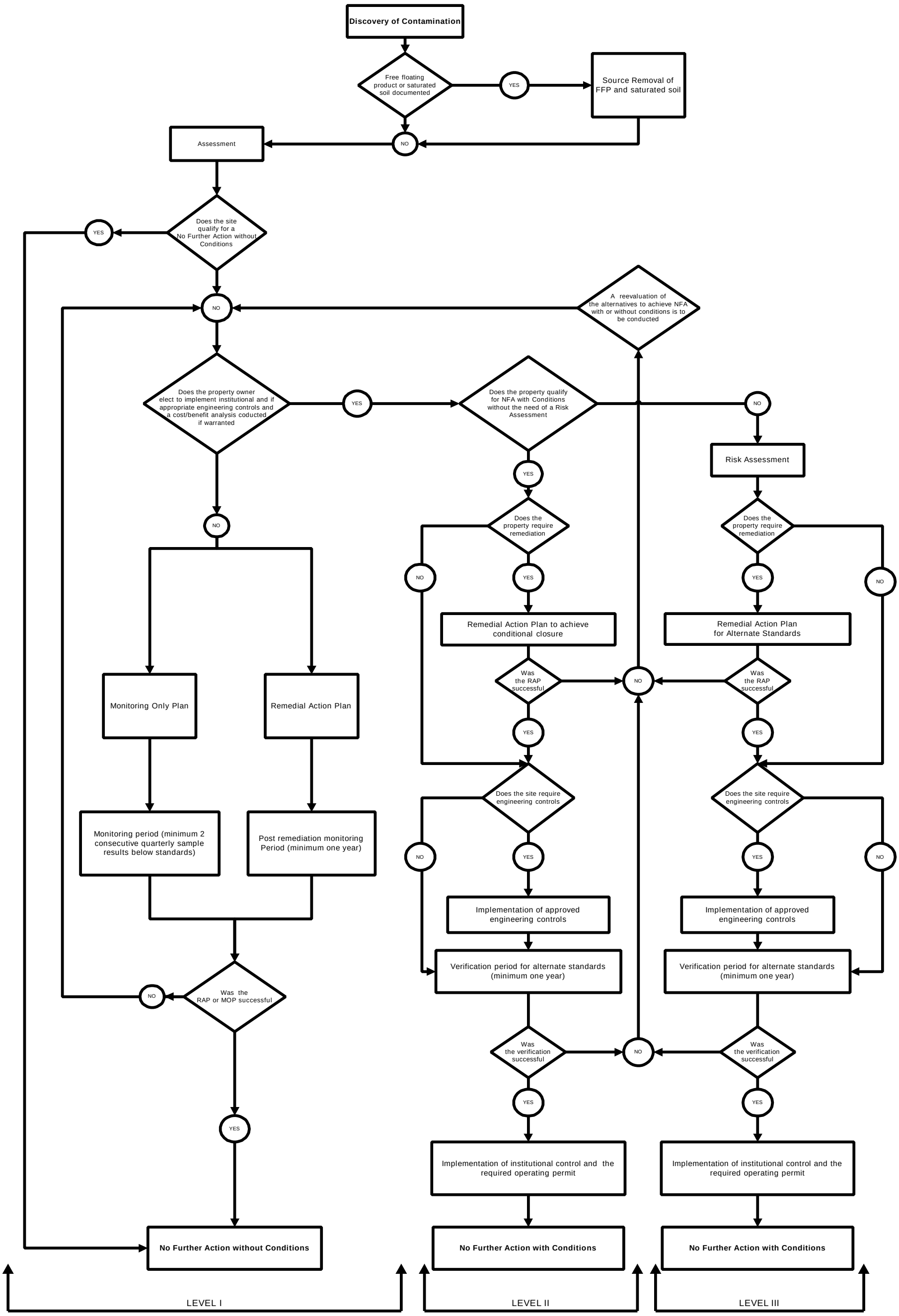Proposed Amendments for Chapter 24 Miami-Dade County Code for Non-Program Sites
Draft RBCA Flow Process